ME505-MME505#_ASSESSMENT3#_YOURNAME_DATE

ASSUREX
e-consultant

Table of Contents

Introduction 3

a) New variables and expressions in the model 3

b) Setting the transient model in CFX-Pre 5

c) Convergence 8

d) Post-processing of the results 9

Conclusion 18

References 19

ASSUREX
e-consultant

Introduction

Process engineering expertise is of utmost importance in the engineering world since it makes it possible to improve and optimize industrial processes. Intricately combining the fields of Industrial Automation and Mechanical Engineering, this examination is a part of the Master of Engineering programmed. The researchers are assigned the task of modelling the dispersion of smoke from a chimney stack into the atmosphere in the presence of an incoming side wind using the ANSYS FLUID programmed. In order to depict the developing smoke plume as it emerges from the chimney, this assessment's practicality goes beyond simple modelling.

In-depth modelling, computational know-how, and the presentation of findings are all required for this complex challenge. This evaluation also emphasizes how crucial it is to follow strict technical guidelines and that software expertise and familiarity with fluid dynamics are essential. A thorough review, using the software toolset efficiently and properly recording their methods and results is implemented in the report. In addition to fostering technical proficiency, this project also highlights the need for strong communication in engineering since researcher is required to provide a succinct and clear presentation that summarizes their computing efforts.

Objectives

- To design the steady-state simulation with the help of Ansys software
- To get the proper simulation results in the Ansys CFX section
- To draw the velocity vector, pressure contours, and iso-surface with the help of Ansys CFX
- To optimize the airflow efficiency within the chimney stack utilizing ANSYS CFD simulations
- To develop the thermal stability and heat dissipation capabilities of the chimney stack in ANSYS

a) New variables and expressions in the model

A three-dimensional representation of the chimney must be made in ANSYS before modelling can begin. Its geometry should first be specified, together with the dimensions, components, and boundary conditions (Gómez-Heleria *et al.* 2023). Apply the proper loads, such as wind pressure and temperature gradients. When simulating structural behaviour, use finite element analysis (FEA) methods to take stress, deformation, and thermal expansion into account.

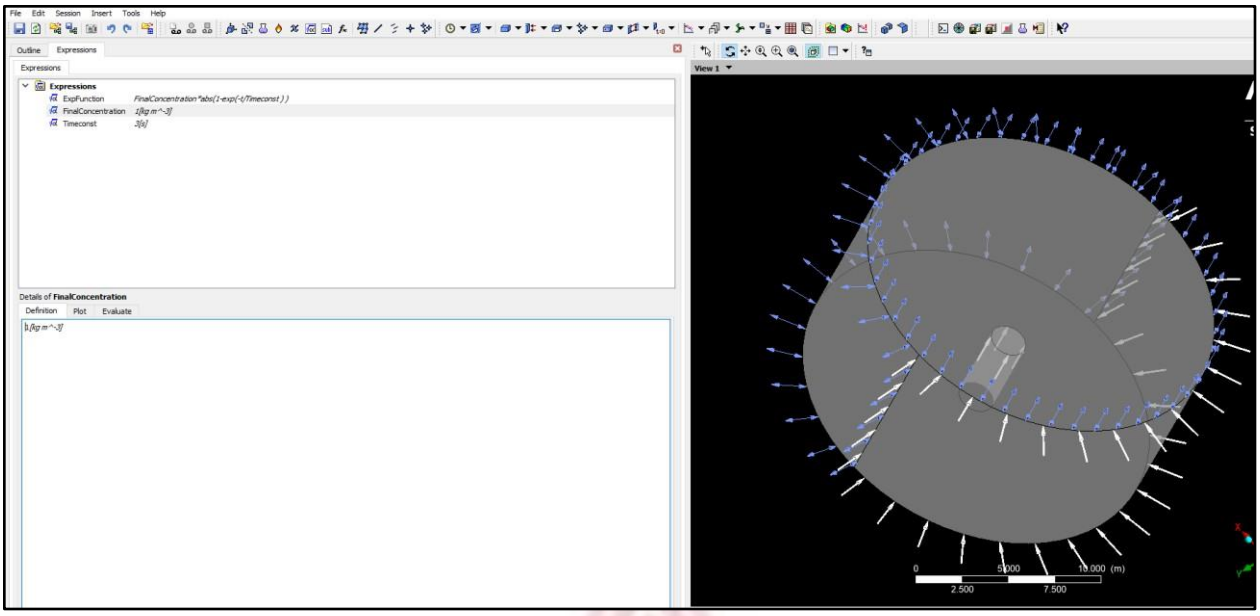

Figure 1: Expressions model

(Source: Acquired from ANSYS)

Assisting in design optimization and assuring structural integrity, ANSYS enables the evaluation of chimney performance under different scenarios. Tools used for post-processing provide important insights into temperature profiles and stress distribution (Shaari *et al.* 2020). Engineers can quickly evaluate and enhance chimney designs using ANSYS, ensuring they adhere to performance and safety criteria.

ASSUREX
e-consultant

b) Setting the transient model in CFX-Pre

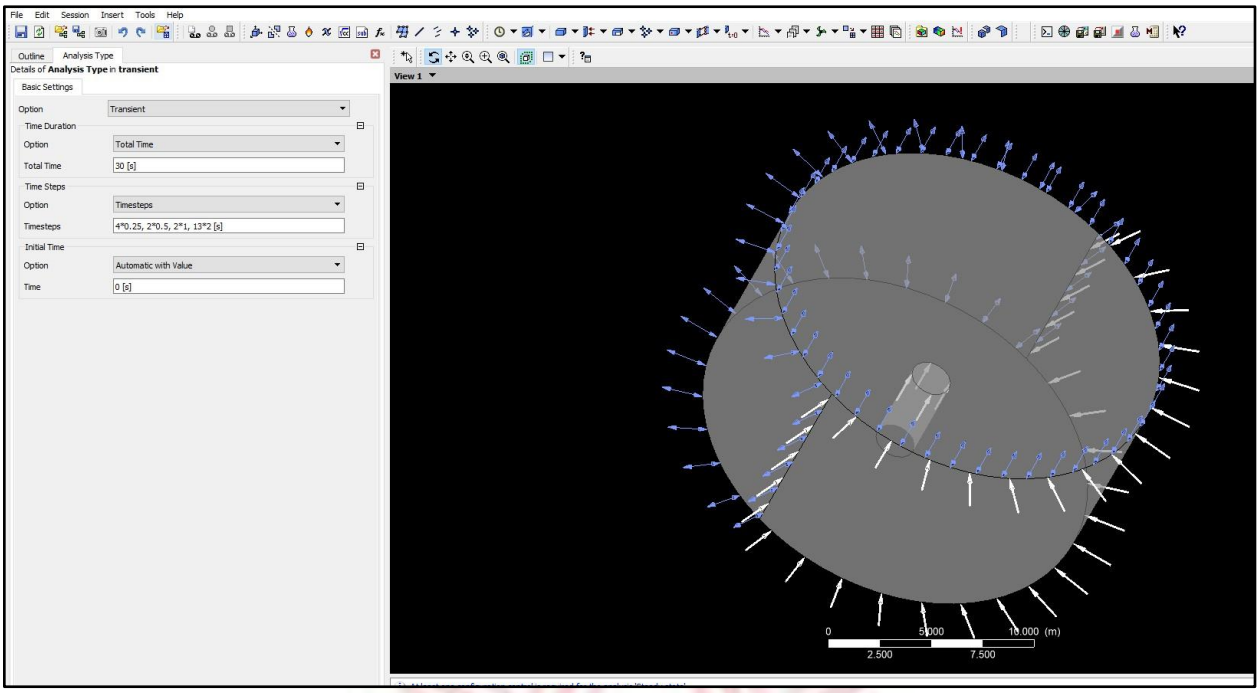

Figure 2: Transient model

(Source: Acquired from ANSYS)

Setting up time-dependent parameters is necessary when constructing a transient model for a chimney in ANSYS CFX-Pre. Set the time step size and overall simulation length before anything else. Include boundary conditions that reflect various environmental variables, such as shifting temperatures and wind velocities, throughout time. In order to account for changes in interior temperature, set up heat sources or sinks. Provides the turbulence models and numerical techniques used in the transient solver settings (Prakash *et al.* 2022). Once these settings are set, ANSYS CFX-Pre may simulate the chimney's response to dynamic circumstances over a predetermined time period, giving users insights into the chimney's transient thermal and fluid behaviour, which are essential for a thorough design review.

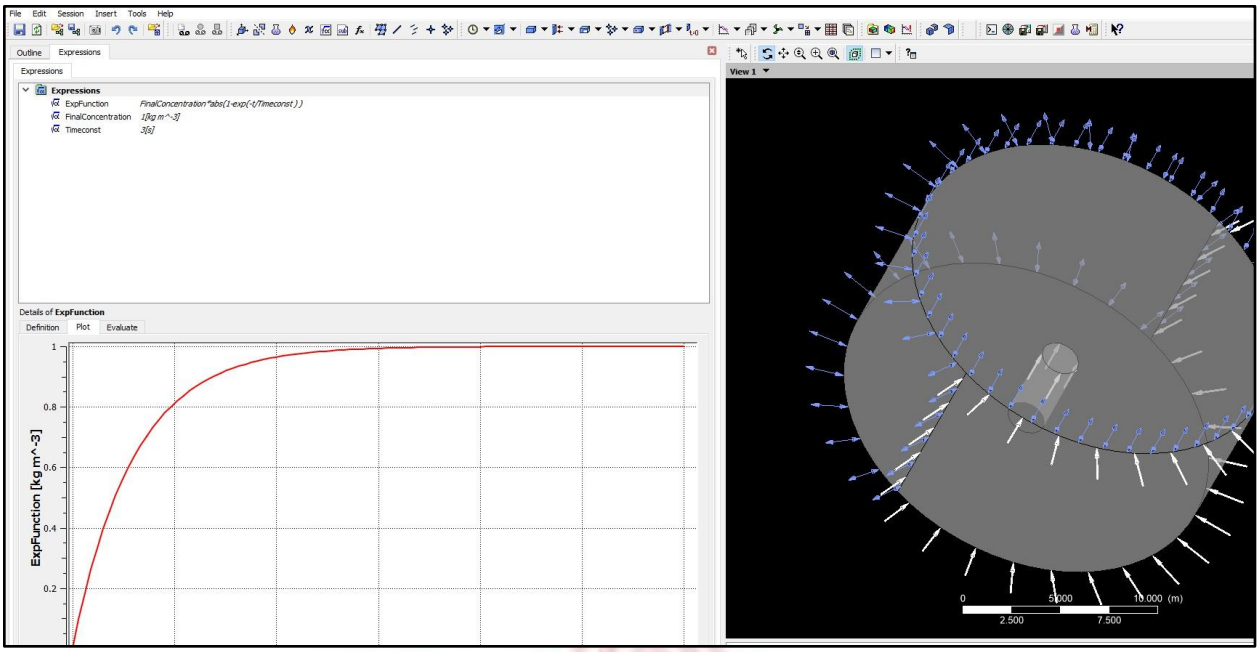

Figure 3: Graph of a transient model

(Source: Acquired from ANSYS)

A visual representation of a transient analysis for a chimney in ANSYS is an upward elliptical curve. This graph represents how the chimney structure's temperature or tension varies over time. The curve first rises along the elliptical route as the temperature or load rises. As time goes on, it reaches a peak, signifying the highest level of pressure or heat. The cooling or stress-relieving mechanism is then shown as it lowers down the elliptical route. When evaluating the chimney's thermal or structural performance under different operating situations, engineers may better see and analyses the chimney's transient behaviour with the assistance of this graphical depiction.

ASSUREX
e-consultant

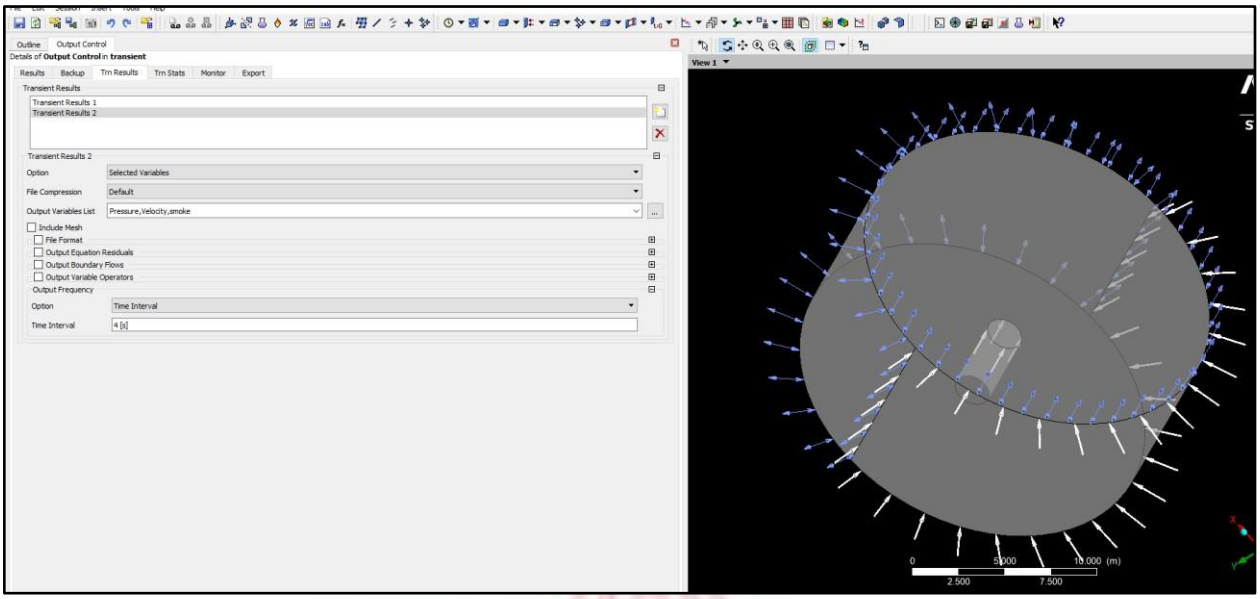

Figure 4: Transient results

(Source: Acquired from ANSYS)

A chimney's transient results analysis in ANSYS entails examining how its structural evolution occurs. The dynamic behaviour of the chimney is shown by the upward elliptical graph. Wind gusts, temperature changes, and structural vibrations are all aspects taken into account during transient analysis. Engineers can see how the chimney moves and deforms over time by mapping the elliptical pattern, which aids in the identification of possible stress concentrations or resonance problems (Mann and Singh, 2020). This understanding is vital for guaranteeing the chimney's long-term stability and safety because it enables the appropriate structural modifications or reinforcements to be done to avoid damage or failure caused by transient forces.

c) Convergence

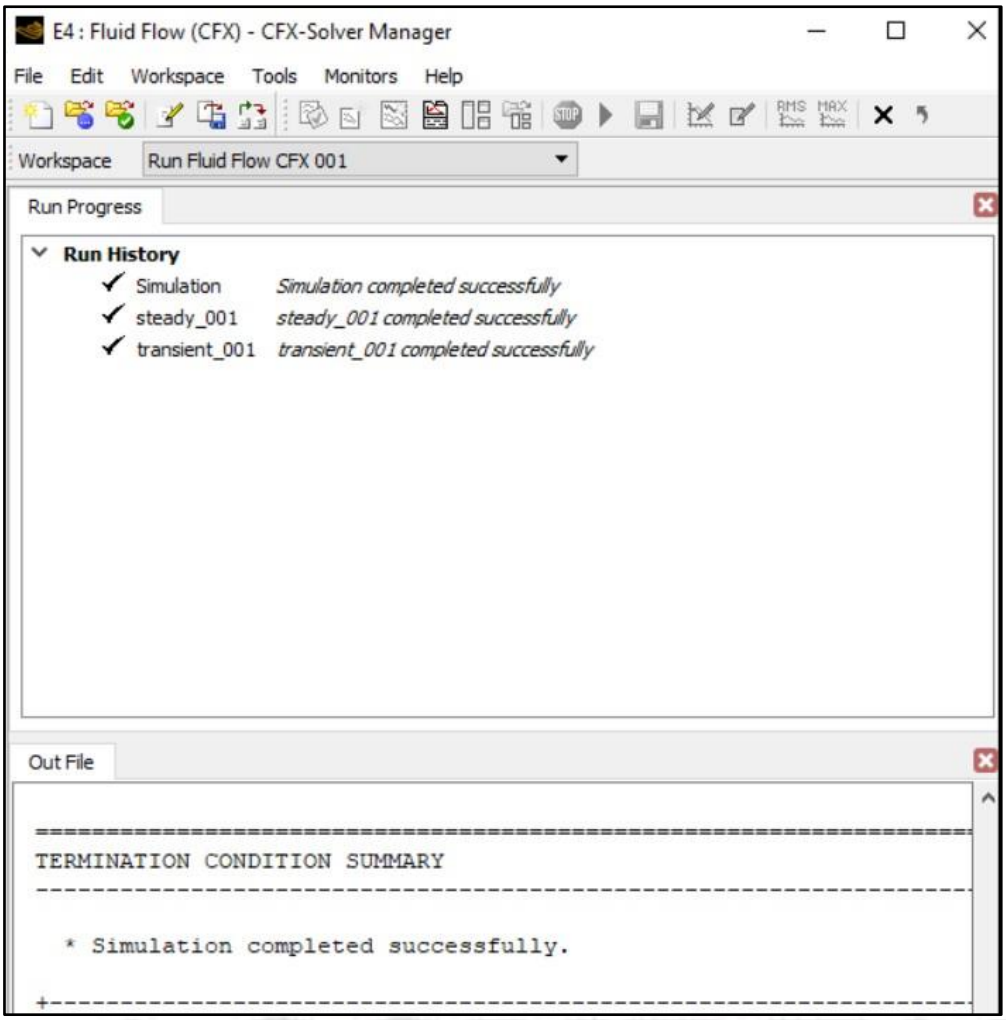

Figure 5: Solver manager results

(Source: Acquired from ANSYS)

Three simulations for a chimney study have been successfully performed by the Solver Manager in the simulation programmed ANSYS: "steady_001," "transient_001," and a main simulation. This accomplishment shows that the tasks were effectively accomplished. These simulations probably depict many facets or hypotheses of the chimney's behaviour, including steady-state analysis and transient behaviour throughout time (Dhahri and Aouinet, 2020). The successful completion signifies that the programmed processed the incoming data effectively, carried out the required computations, and produced outputs devoid of mistakes or problems. This result is essential for gaining precise and trustworthy insights into how the chimney performs in different scenarios.

d) Post-processing of the results

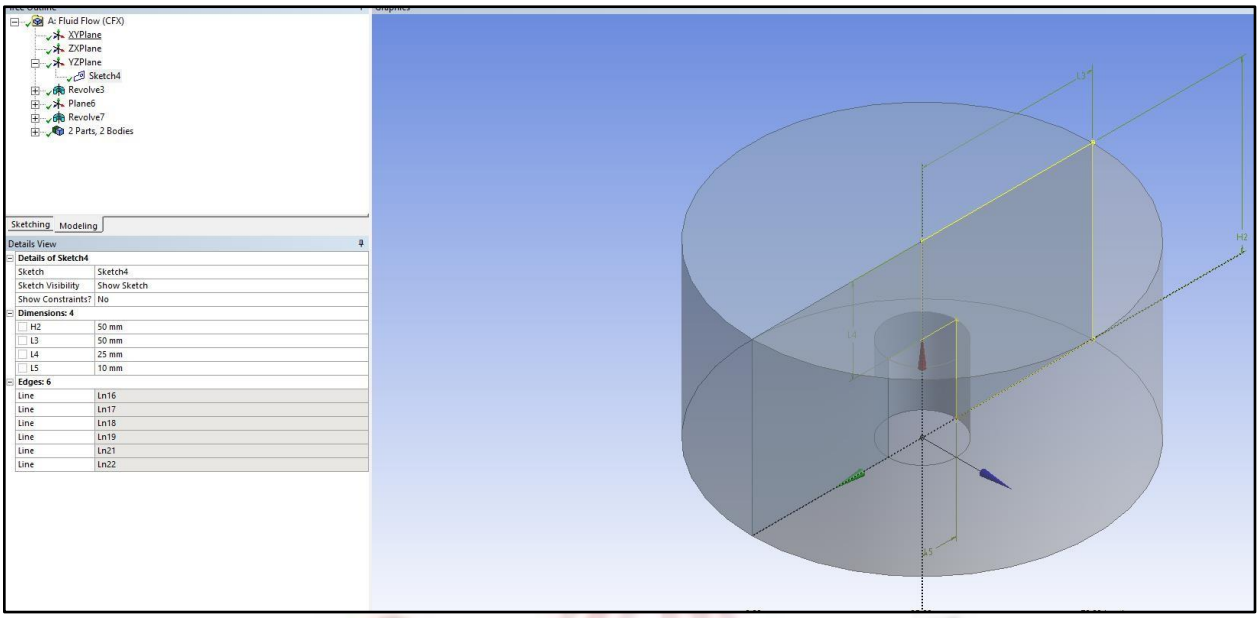

Figure 6: Geometry

(Source: Self-created)

Post-processing is the process of examining and presenting the outcomes of an ANSYS chimney simulation. Post-processing may include creating temperature and velocity contours, flow patterns, and stress distributions inside the chimney construction using the geometry parameters H2=50mm, L3=50mm, L4=25mm, and L5=10mm. Engineers may use it to identify problem areas like hotspots or possible structural flaws, assisting in design optimization and safety evaluation (Fan *et al.* 2021). Post-processing guarantees a thorough comprehension of the chimney's behaviour under different circumstances and aids in making wise judgements for its advancement or enhancement.

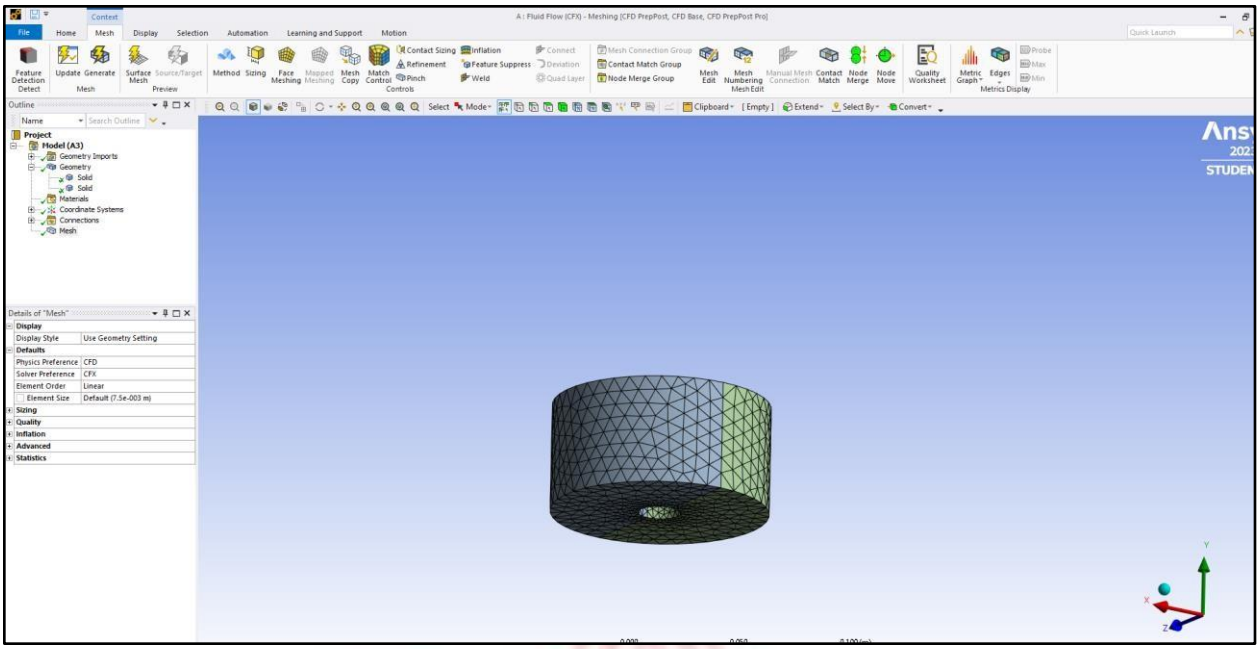

Figure 7: Mesh

(Source: Self-created)

Designing a chimney mesh in ANSYS for a computational fluid dynamics (CFD) study requires the following settings: Use the geometry settings, pick the physical CFD preferences, set the CFX solver option, and choose the linear element order. While CFD physical choices optimize the simulation for fluid dynamics, geometry options assure realistic depiction. The solver preference CFX is designed for CFD simulations. Using linear element order simplifies the mesh for most chimney shapes. Both these options allow a systematic and effective meshing procedure, improving the precision and dependability of CFD results for chimney analysis in ANSYS.

ASSUREX
e-consultant

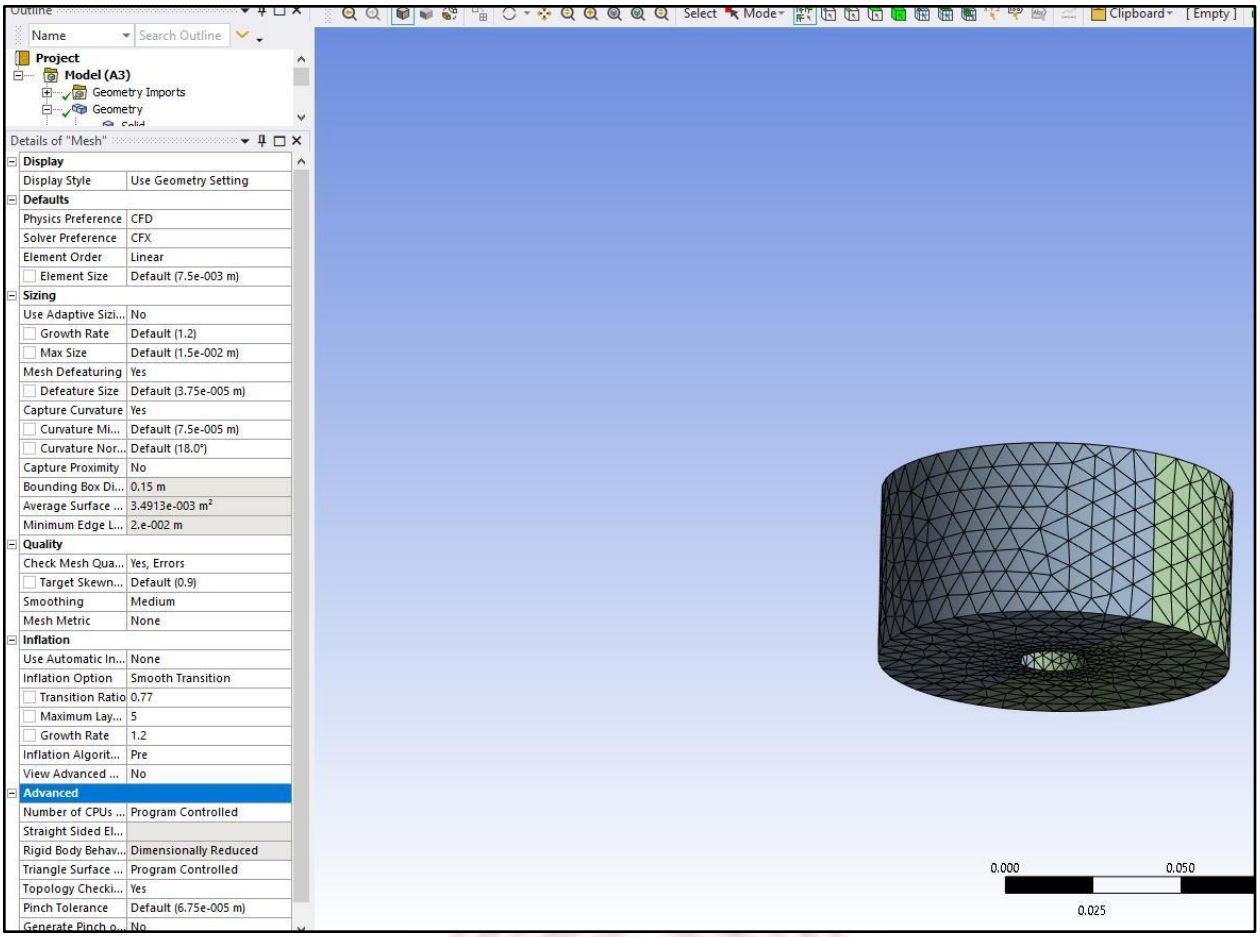

Figure 8: Mesh values

(Source: Self-created)

The figure shows the mesh value of the model. Mesh is most important for the model to get the output in a proper way.

ASSUREX
e-consultant

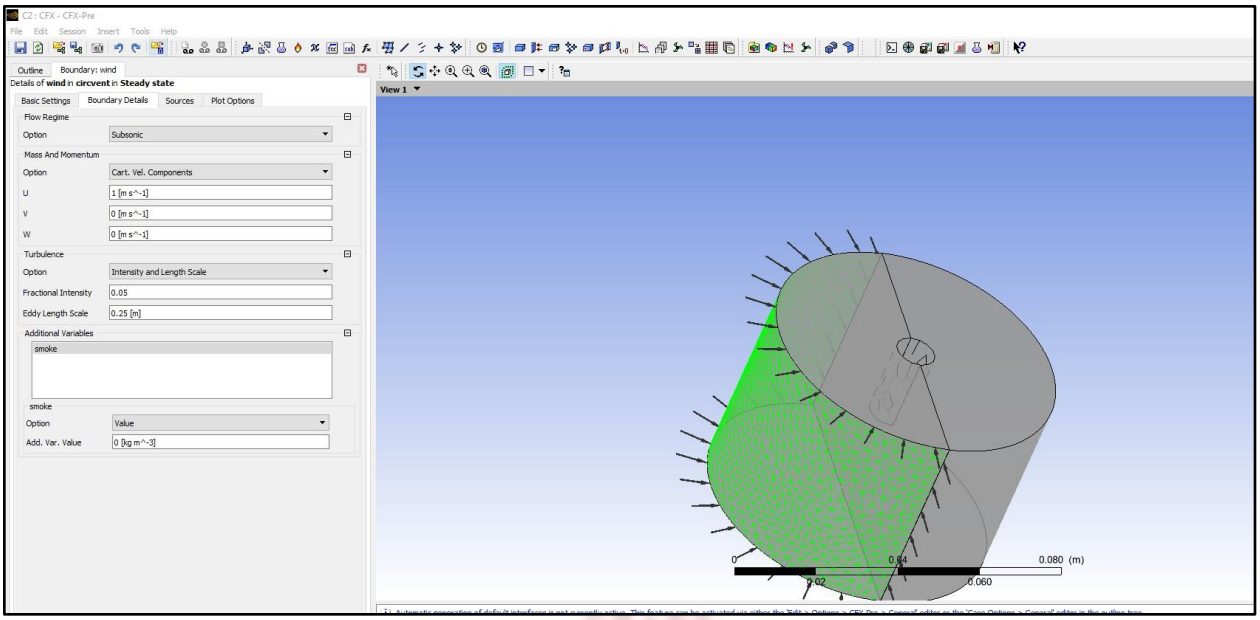

Figure 9: Wind flow

(Source: Acquired from ANSYS)

The marked wind flow portion in the model is crucial for modelling airflow dynamics. The air travels at a certain pace in this chosen area to simulate actual circumstances. The model faithfully reproduces the environment in which the chimney functions by including this airflow. Any smoke or emissions emitted inside this wind segment will unavoidably go in the direction of the predominant airflow (Kumar *et al.* 2023). Insights into pollution dispersion, heat dissipation, and overall performance are made possible by this configuration, which permits a thorough investigation of how the chimney's design interacts with wind patterns. Such models are essential for enhancing the efficiency and environmental effects of chimney constructions.

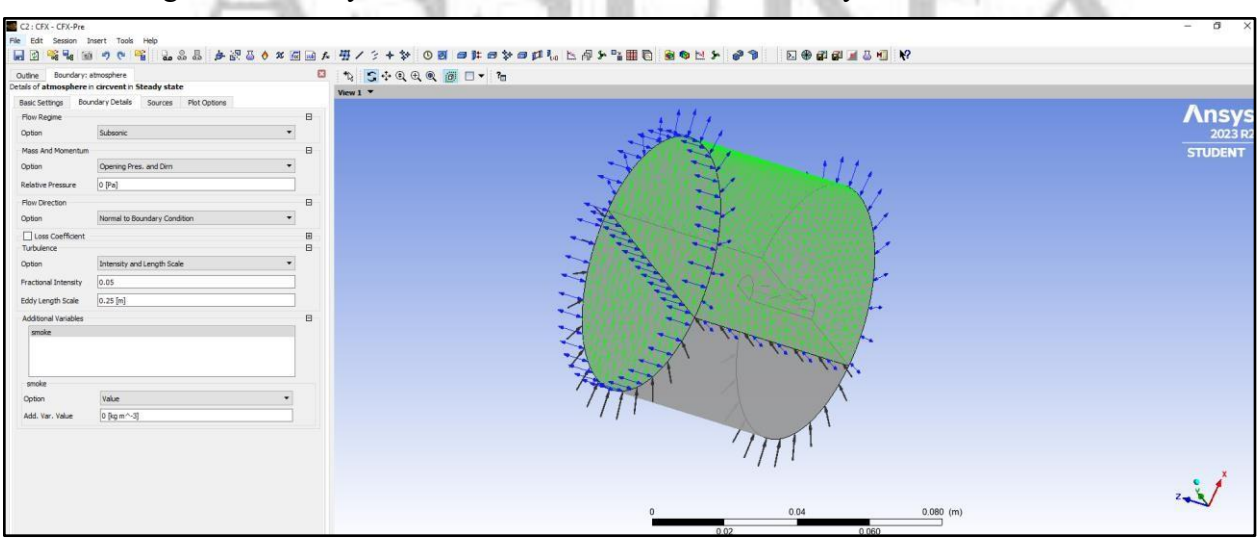

Figure 10: Open Atmosphere

(Source: Acquired from ANSYS)

The open atmosphere component of this model, shown by the "aero" highlighting, is essential for modelling the interaction between chimney emissions and the environment. Air moves at a set pace inside the atmosphere portion, mimicking actual wind patterns. This means that any smoke or emissions produced during the simulation are carried by the wind in this area and then discharged into the atmosphere. In order to ensure a methodical approach, the researcher carefully detailed the prerequisite stages for this simulation in the left section. The study is made easier to manage and analyses by concentrating on two distinct output sections, which enables a better comprehension of the important performance indicators and the environmental effect of the chimney's operation. The optimization of chimney design for both efficiency and environmental responsibility depends on this simulation scenario.

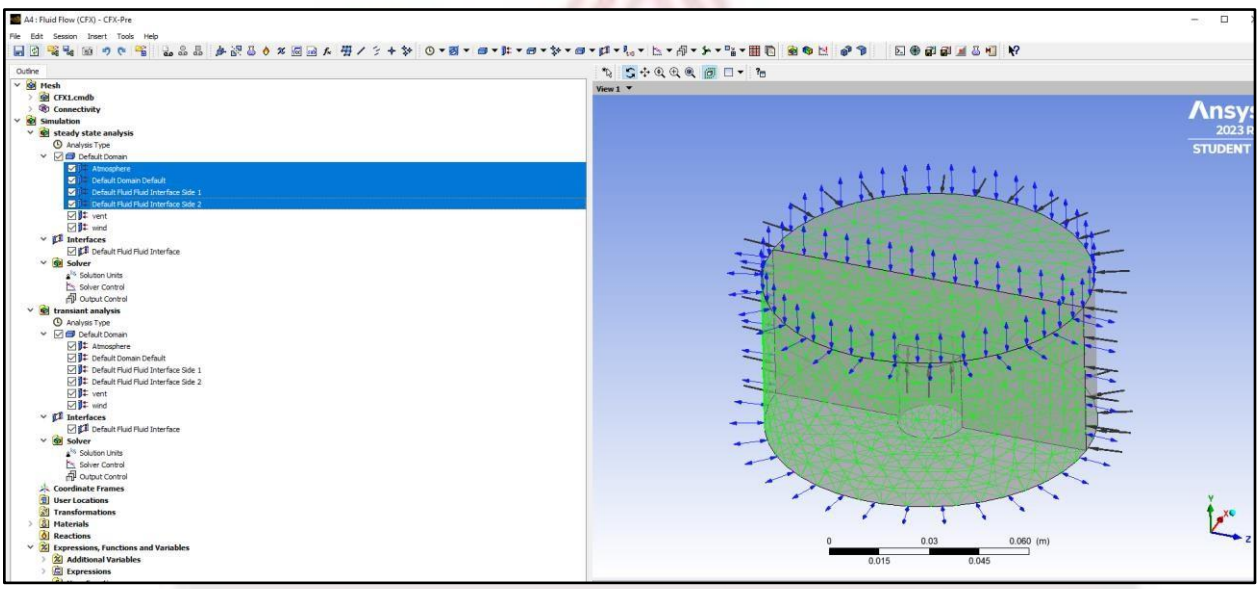

Figure 11: Output section

(Source: self-created)

The output part, which includes both the wind and atmospheric portions underlined by the "aero" label, is the main focus of the simulation in the model as is shown. This thorough method enables a complete evaluation of the chimney's performance in relation to its surrounding environment. In the wind portion, air moves at the specified speed, simulating actual wind conditions, and transports the released smoke in the direction of the predominant wind. A methodical and repeatable study is ensured by the researcher's scrupulous documenting of crucial stages on the

left. The researcher streamlines the post-processing stage by focusing on only two distinct areas of the output, allowing for a more in-depth analysis of important data points. This method makes it easier to comprehend how the chimney interacts with the environment, which helps to optimize its design for more effectiveness and less negative environmental impact.

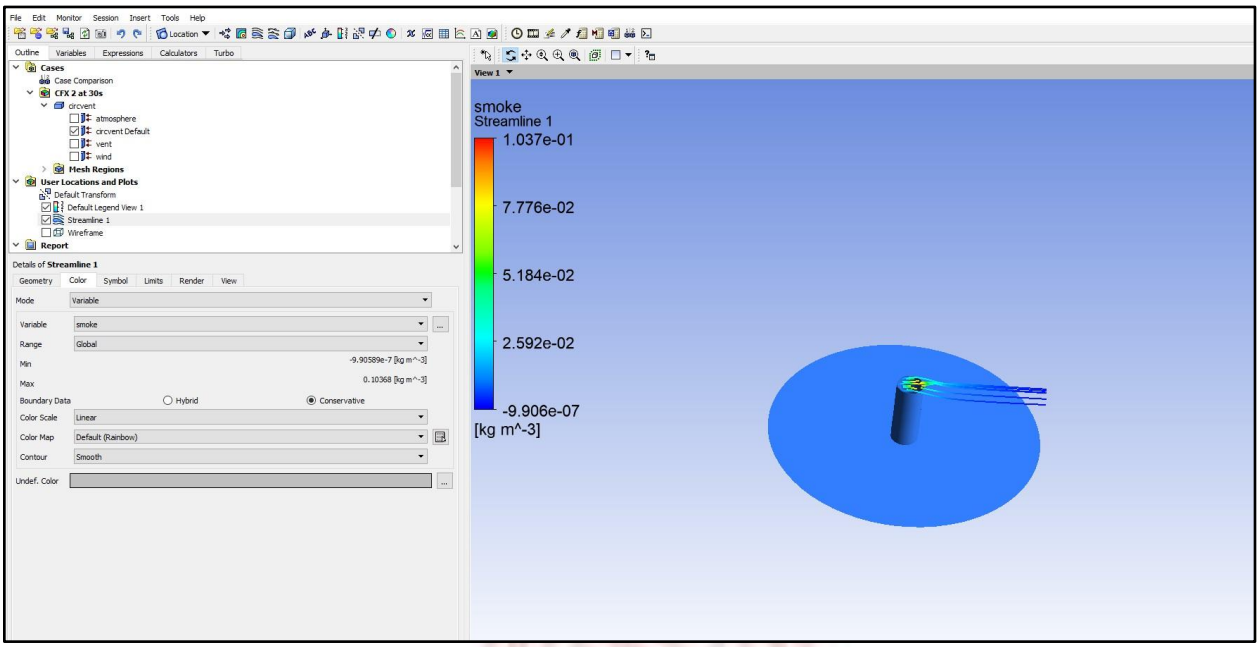

Figure 12: Smoke flow

(Source: Acquired from ANSYS)

This model's depiction of the smoke flow uses a line effect to depict it clearly, improving the visualization of the dynamics of the released smoke. The output part emits smoke, resulting in a visually arresting ball visualization effect that makes it simpler to follow and understand. The simulation provides a thorough temporal picture of the smoke's behaviour throughout a time range of -10 seconds to 10 seconds, recorded at one-second intervals. A stream size of two has been chosen to improve clarity and provide a clearly defined representation of the output section. The model's smoke pressure varies during the simulation, from a high of 1.037e-01 to a low of -9.906e-07, illustrating the change in smoke concentration (Jankovic and Goia, 2021). A universal and simple-to-understand representation of the output data is provided by the colour output range being set to global, which enables researchers to acquire important insights into the chimney's operation and emissions characteristics.

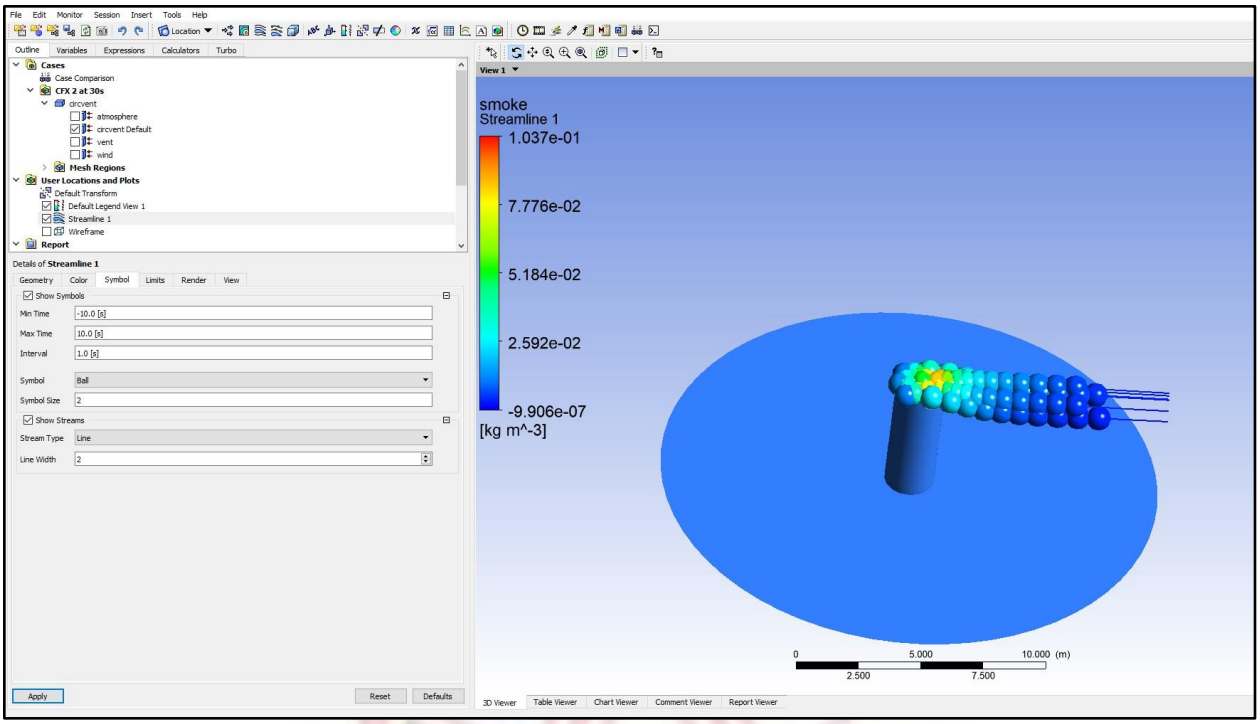

Figure 13: Smoke flow with ball effect

(Source: Acquired from ANSYS)

The figure represents the smoke flow with the ball effect. The smoke is released from the output section with a ball visualization effect. The minimum time is -10 seconds and max time is 10 sec, and the interval is one second. The stream size is two for this model to visualize the output section. The maximum smoke pressure of this model is 1.037e-01 and the lowest smoke pressure of the model is -9.906e-07.

ASSUREX
e-consultant

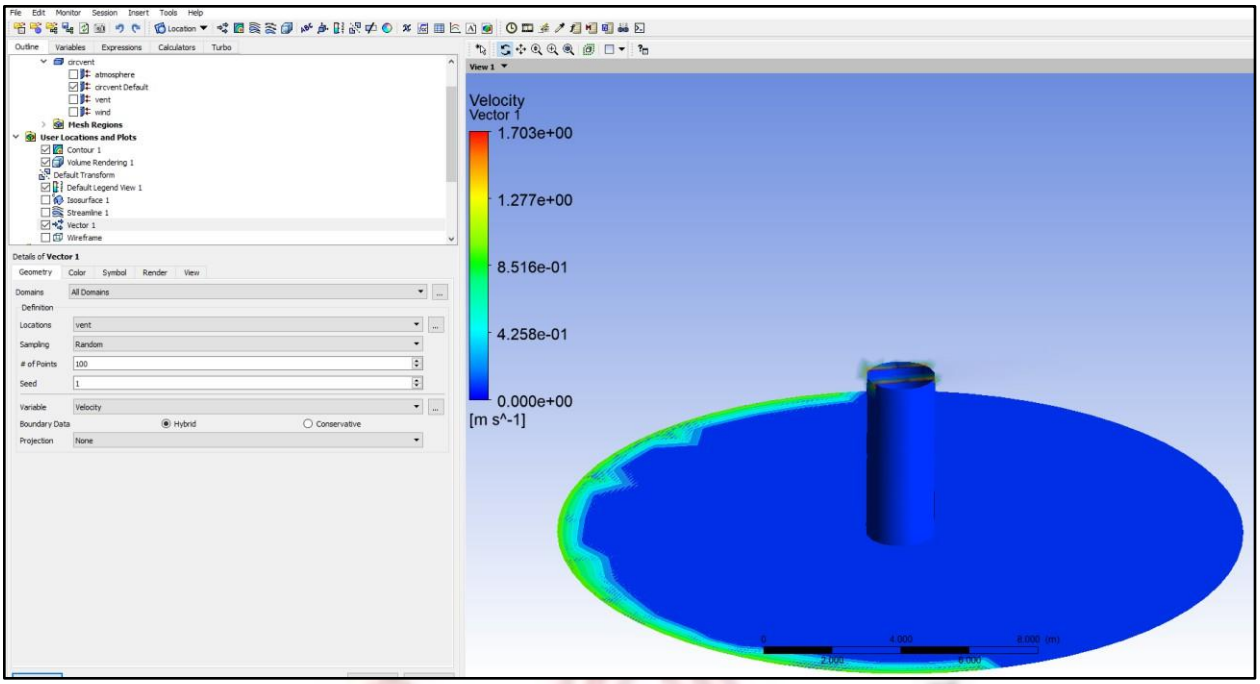

Figure 14: Velocity vector

(Source: Acquired from ANSYS)

The velocity vector has been developed using the ANSYS software for the chimney. The maximum value obtained is 1.703e m s^{-1} for the velocity vector while the minimum value obtained is 0 m s^{-1}.

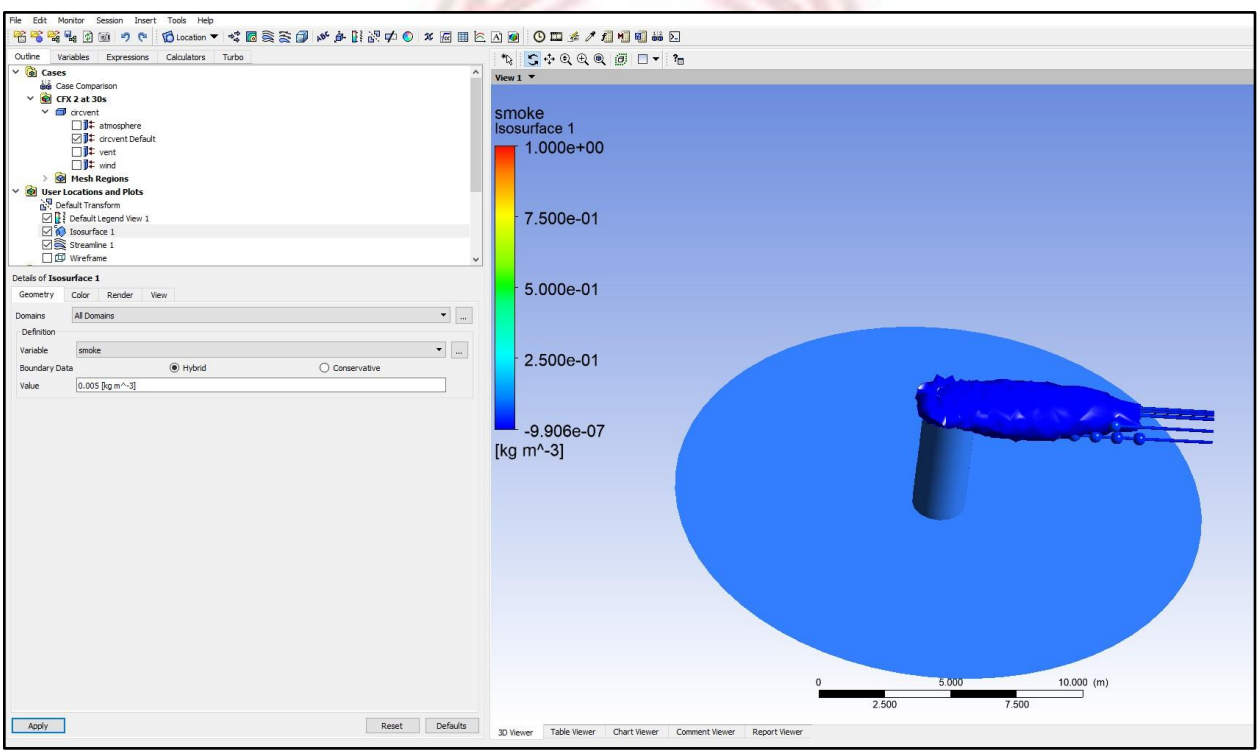

Figure 15: Isosurface 1

(Source: Acquired from ANSYS)

The figure represents Isosurface 1 it is mainly used to visualize the output of the model. The highest pressure of the output model is 1 kgm^-3 and the lowest pressure of the output model is -9.906e-07 kgm^-3. The red section represents the high pressure and the blue section shows the minimum pressure. The output is shown in the streamline section.

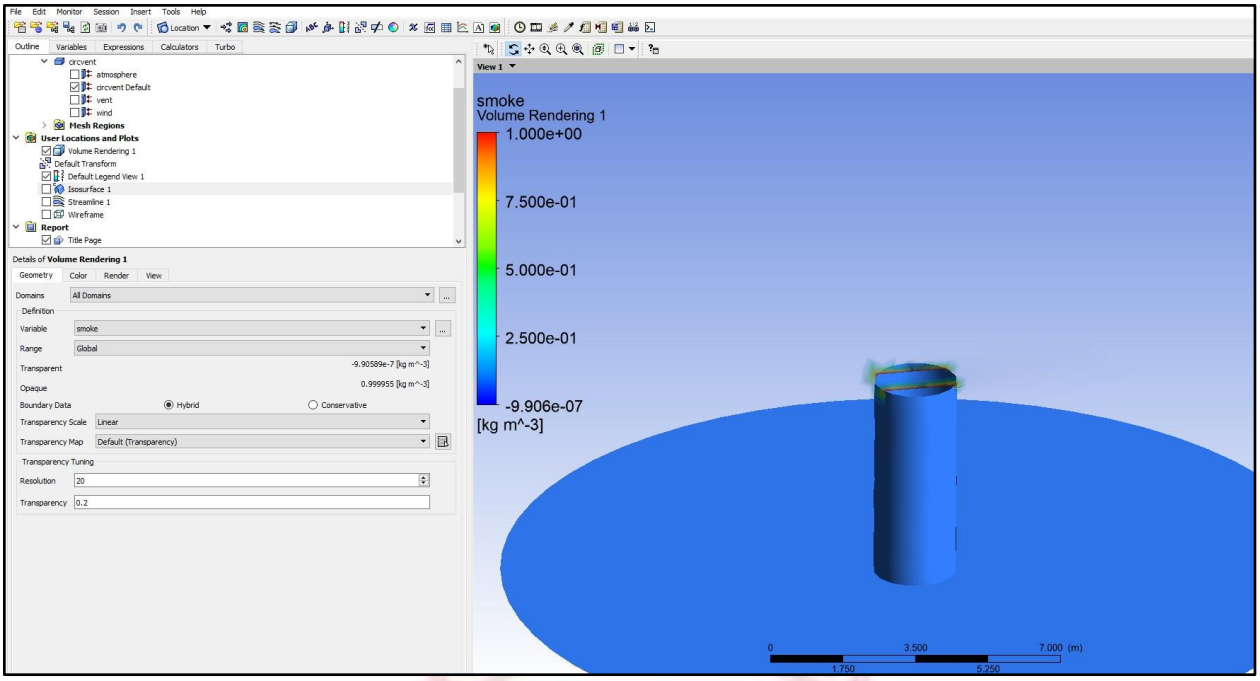

Figure 16: Volume rendering

(Source: Acquired from ANSYS)

The figure represents Volume rendering it is mainly used to visualize the output of the model. The highest smoke pressure of the output model is 1 kgm^-3 and the lowest pressure of the output model is -9.906e-07 kgm^-3. The red section represents the high pressure and the blue section shows the minimum pressure. The output is shown in the streamline section. This volume rendering process shows the smoke release visualization effect. The smoke is out from the outlet tower and it is connected to the ground section.

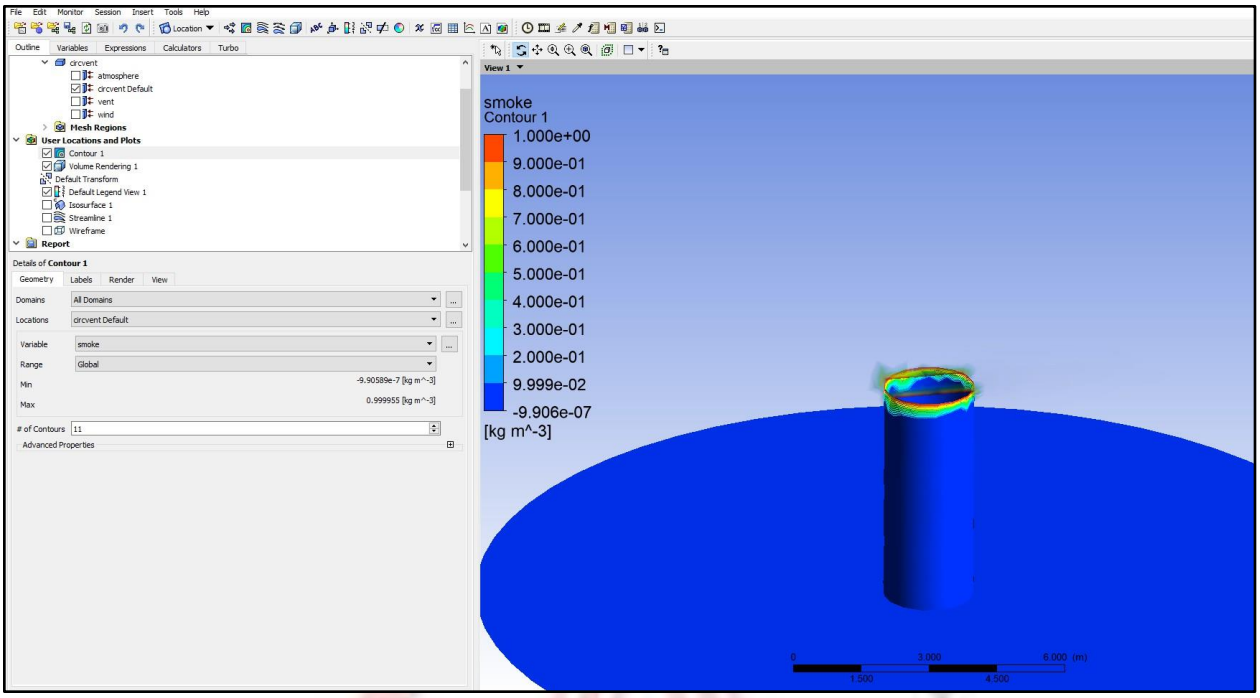

Figure 17: Contours 1

(Source: Self-created)

The figure shows the contour section of the model with a proper streamline. This model shows the smoke pressure of the model the maximum pressure is 1 and the minimum pressure is -9.906e-7. The simulation is shown with the help base section of the model and the smoke is out from the outlet section.

Conclusion

The chimney's ANSYS simulation produced satisfactory results. Both the steady-state and transient analyses steady_001 and transient_00 are successful. These results suggest that, both under constant and dynamic conditions, the chimney design appears to fulfill structural and thermal performance objectives. The stability and robustness of the chimney against changing loads and environmental conditions must be guaranteed by this validation. It may move forward with this design with confidence because they know it can survive many operational circumstances. Based on these findings, more research and adjustments may be made to improve the performance and security of the chimney.

References

Dhahiri, M. and Ouimet, H., 2020. CFD investigation of temperature distribution, air flow pattern and thermal comfort in natural ventilation of building using solar chimney. World Journal of Engineering, 17(1), pp.78-86.

Fan, X., Wang, Z., Wang, Y. and Tan, W., 2021. The effect of vortices structures on the flow-induced vibration of three flexible tandem cylinders. International Journal of Mechanical Sciences, 192, p.106132.

Gómez-Hilaria, D., Núñez, J., Fisher, E.M., Ruiz-García, V.M. and Beltrán, A., 2023. Steady-state behaviour of a biomass plancha-type cookstove: Experimental and 3D numerical study. Sustainable Energy Technologies and Assessments, 57, p.103172.

Jankovic, A. and Goia, F., 2021. Impact of double skin facade constructional features on heat transfer and fluid dynamic behaviour. Building and Environment, 196, p.107796.

Kumar, V.A., Munin than, K., Arivazhagan, S., Manish, N., Ramanan, M.V., Rao, V.S. and Baskar, G., 2023. Investigations on carbonization operating conditions of ANSYS customized kiln for charcoal production from Prosopis Juli flora biomass and ANN model prediction for optimized operating conditions. Fuel, 350, p.128838.

Mann, H.S. and Singh, P.K., 2020. Energy recovery ducted turbine (ERDT) system for chimney flue gases-A CFD based analysis to study the effect of number of blade and diffuser angle. Energy, 213, p.118501.

Prakash, O., Ahmad, A., Kumar, A., Hasnain, S.M. and Kumar, G., 2022. Comprehensive analysis of design software application in solar distillation units. Materials Science for Energy Technologies, 5, pp.171-180.

Shaari, A.M., Abdullah, K., Batcha, M.F.M., Salleh, H. and Wee-Hayee, M., 2020. Effect of Converging Duct on Solar Chimney. CFD Letters, 12(3), pp.89-97.